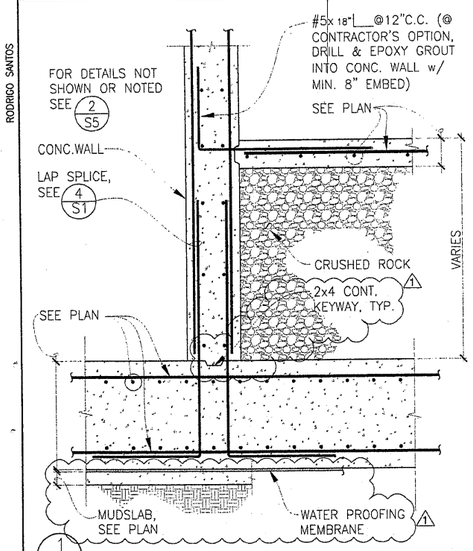


1 SCALE: 3/4" = 1'-0"

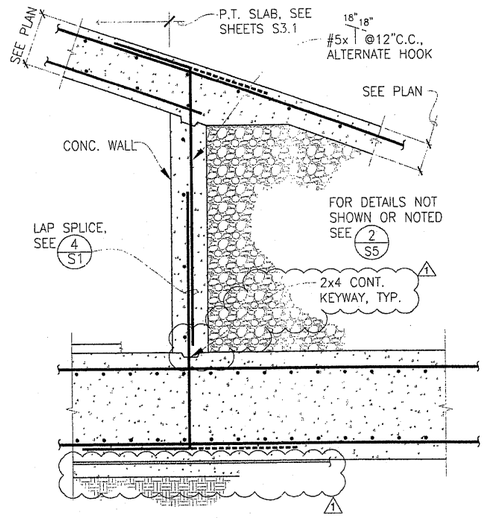


2 SCALE: 3/4" = 1'-0"

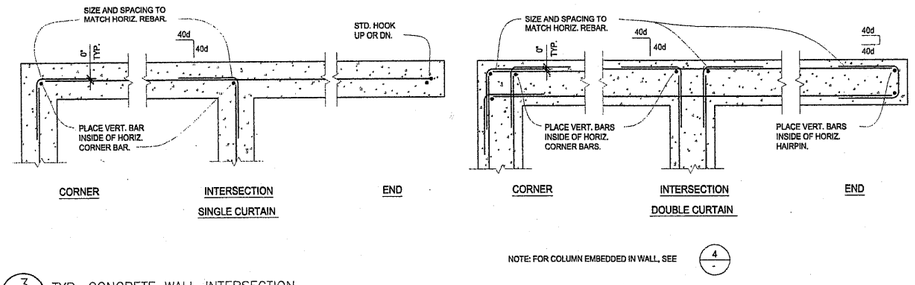


3 TYP. CONCRETE WALL INTERSECTION
SCALE: 3/4" = 1'-0"

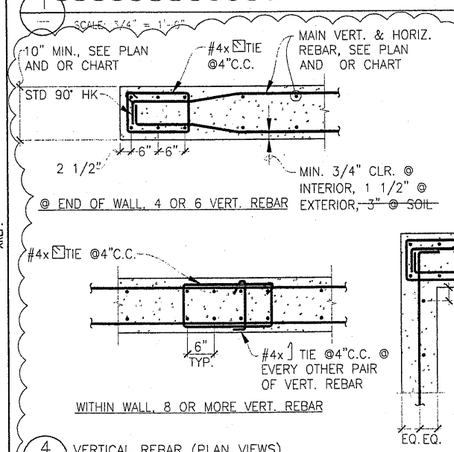


4 VERTICAL REBAR (PLAN VIEWS)
SCALE: 3/4" = 1'-0"

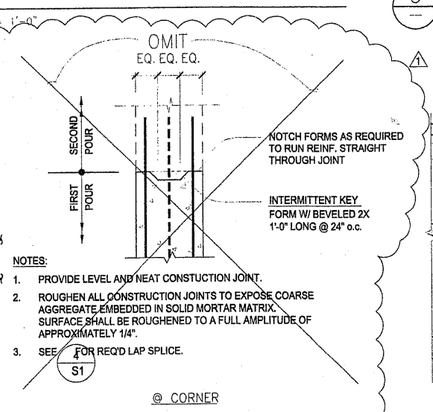


NOTES:
1. PROVIDE LEVEL AND NEAT CONSTUCTION JOINT.
2. ROUGHEN ALL CONSTRUCTION JOINTS TO EXPOSE COARSE AGGREGATE EMBEDDED IN SOLID MORTAR MATRIX. SURFACE SHALL BE ROUGHENED TO A FULL AMPLITUDE OF APPROXIMATELY 1/4".
3. SEE 4/S1 FOR REQ'D LAP SPLICE.

5 TYP. CONCRETE WALL CONSTRUCTION JOINT
SCALE: 3/4" = 1'-0"

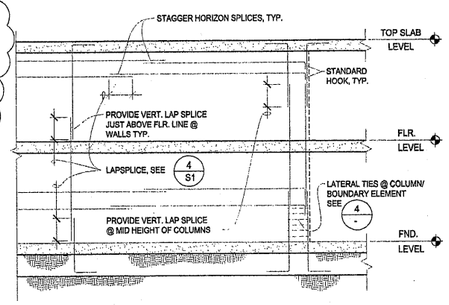


6 TYP. LAP SPLICES IN CONCRETE WALL
SCALE: 3/4" = 1'-0"

| TRIM REINF., U.O.N. | | | |
|---|---|---|---|
| WALL THICKNESS | "a" (HORIZ.) | "b" (VERT.) | "c" (DIAG.) |
| 8" | (2) #5 | (2) #5 | (1) #4x3'-0" |
| 10" | (2) #6 | (2) #6 | (2) #4x3'-0" |
| 12" | (2) #6 | (2) #6 | (2) #4x3'-0" |
| | | | |

NOTES:
1) MAX. ALLOWABLE OPNG. WIDTH=8'-0"

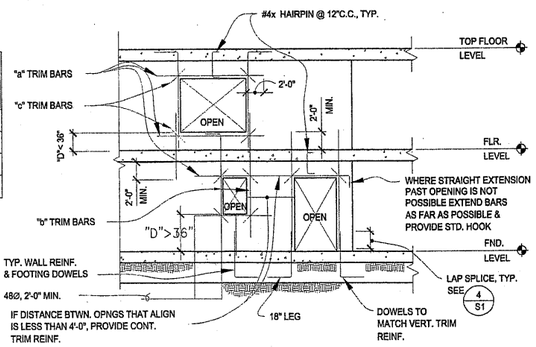


7 REBAR AT OPENING
SCALE: 3/4" = 1'-0"

REVISIONS

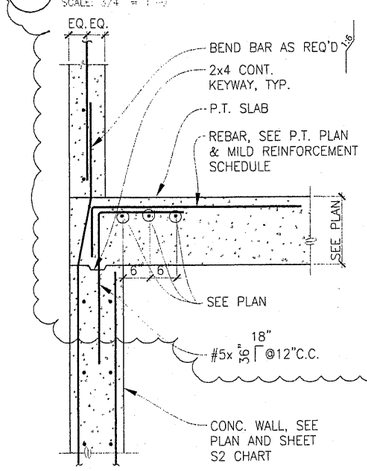


8 SCALE: 3/4" = 1'-0"

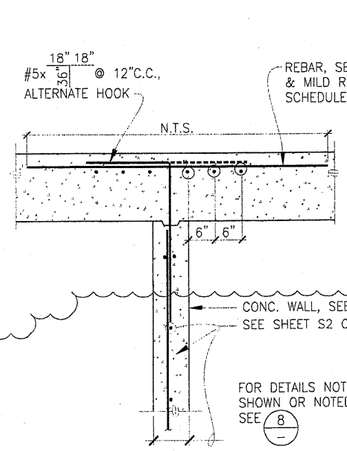


9 WALL w/ ONE CURTAIN OF REBAR
SCALE: 3/4" = 1'-0"

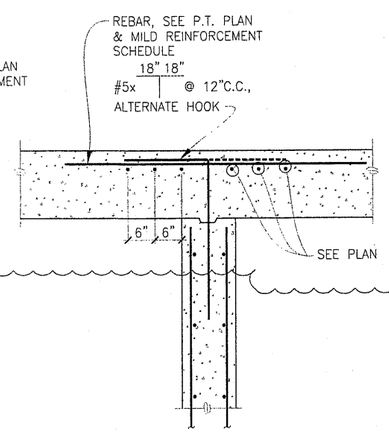


WALL w/ TWO CURTAINS OF REBAR

10 SCALE: 3/4" = 1'-0"

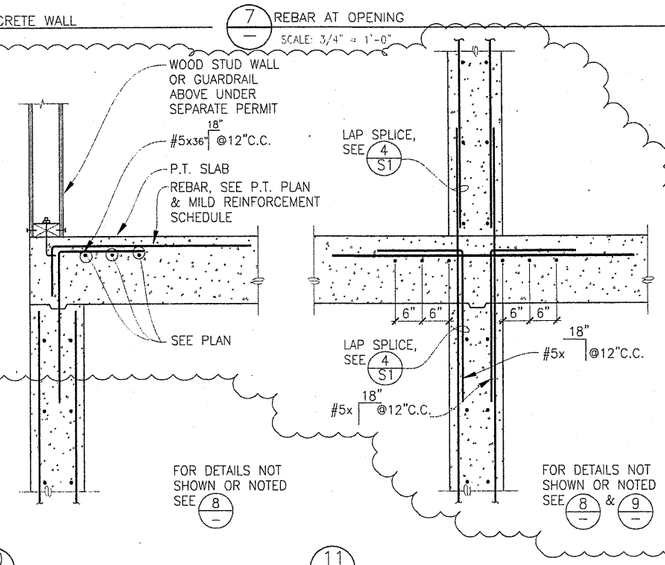


11 SCALE: 3/4" = 1'-0"

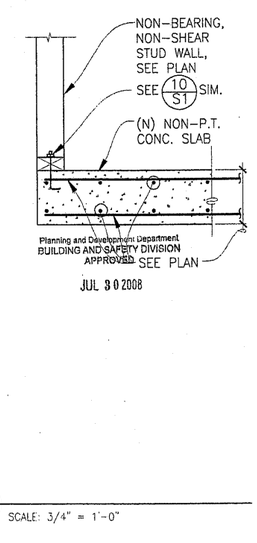


12 SCALE: 3/4" = 1'-0"

| REVISIONS | BY |
|---|---|
| 1 03/17/06 | T.T. |
| 2 GENERAL | |
| REVISION | |
| 06/27/08 | |


SANTOS & URRUTIA STRUCTURAL ENGINEERS INC
2451 HARRISON STREET
SAN FRANCISCO, CA 94110
TELEPHONE (415) 642-7722
FAX (415) 642-7590


STRUCTURAL DETAILS

# MIXED-USE BUILDING

1122 UNIVERSITY AVENUE
BERKELEY, CALIFORNIA

| | |
|---|---|
| Date: | 01 JAN 06 |
| Scale: | AS SHOWN |
| Drawn By: | TONY T. |
| Job No: | 6025 |
| Sheet | S10 |
| Of | Sheets |

RODRIGO SANTOS

XREF:

36x24